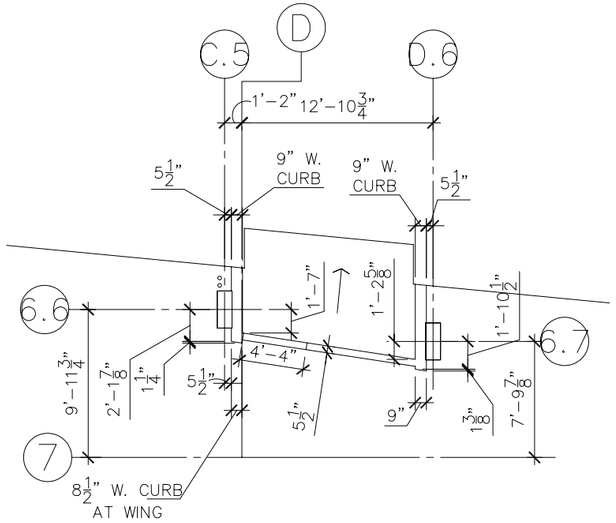

BALCONY 1

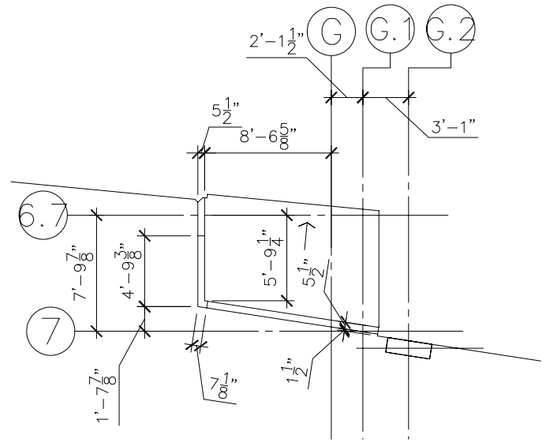

BALCONY 2

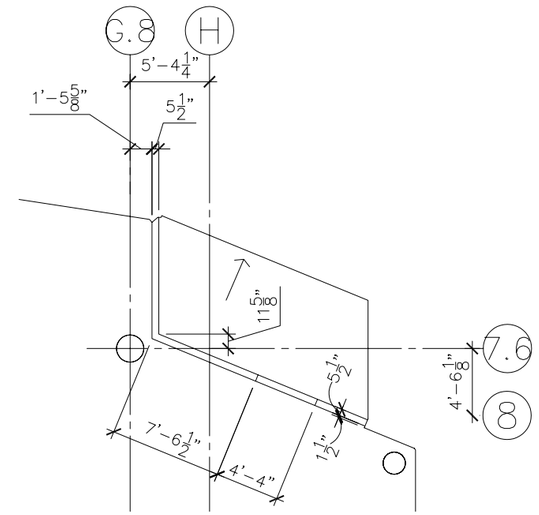

BALCONY 3

DIMENSIONS ON THIS DWG.
ARE TO CURBS ONLY!!
SEE SHEET WT-6~19 FOR
SLAB EDGE DIMENSIONING

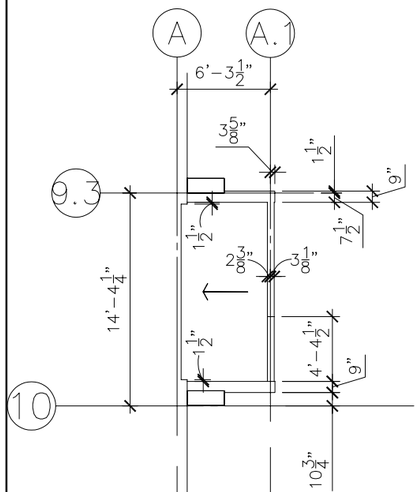

BALCONY 6

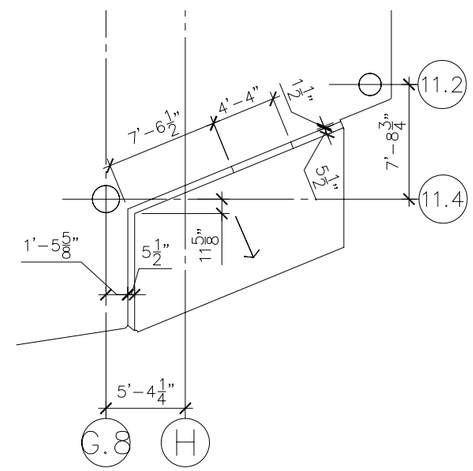

BALCONY 4

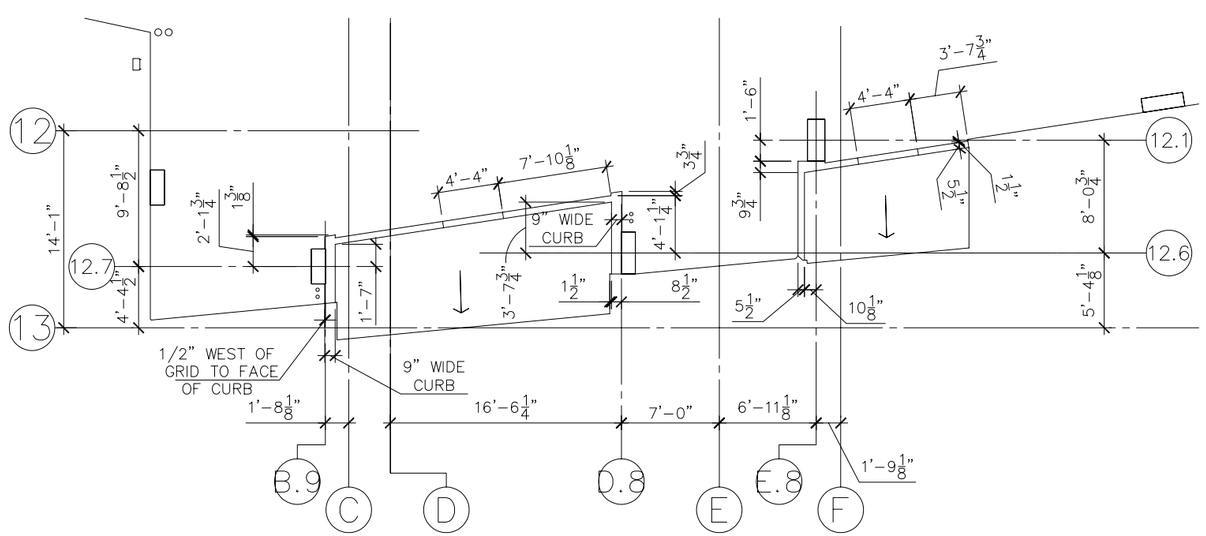

BALCONY 5

NOTES:

1) XX'-X" TOP OF SLAB
XX'-X" BOT. OF SLAB

2) ALL CURBS ARE 5½"W X 6"H, EXCEPT AT DOORS WHERE CURB WILL BE 1"H ABOVE THE SLAB LEVEL. SEE DETAIL 7/WT-5A

No.	Revision/Issue	Date
	ISSUED FOR FIELD USE	6-15-05

GAR ENTERPRISES, LLC
1376 W. MARLIN DRIVE
CHANDLER, AZ 85248
PHONE & FAX 480-899-5367
E-MAIL: GARNETTE@COX.NET

GAR ENTERPRISES, LLC DRAWING DISCLAIMER

NOTE: GAR ENTERPRISES, LLC HAS DEVELOPED THIS DRAWING FROM INFORMATION PROVIDED BY THE CONTRACTOR, AS LISTED ON TITLE BLOCK OF THIS DWG. ALL INFORMATION SHALL BE VERIFIED BY SAID CONTRACTOR BEFORE UTILIZING IT FOR ACTUAL CONSTRUCTION PURPOSES.

HOFFMAN STRUCTURES, INC.

THE MERIWETHER
PORTLAND, OR

Project # 2322003

JUNE 14, 2005

Scale AS SHOWN

Sheet WT-6~19A

WEST TOWER
LEVELS 6~19 BALCONY
& CURB PLAN